B1 PH-306BA

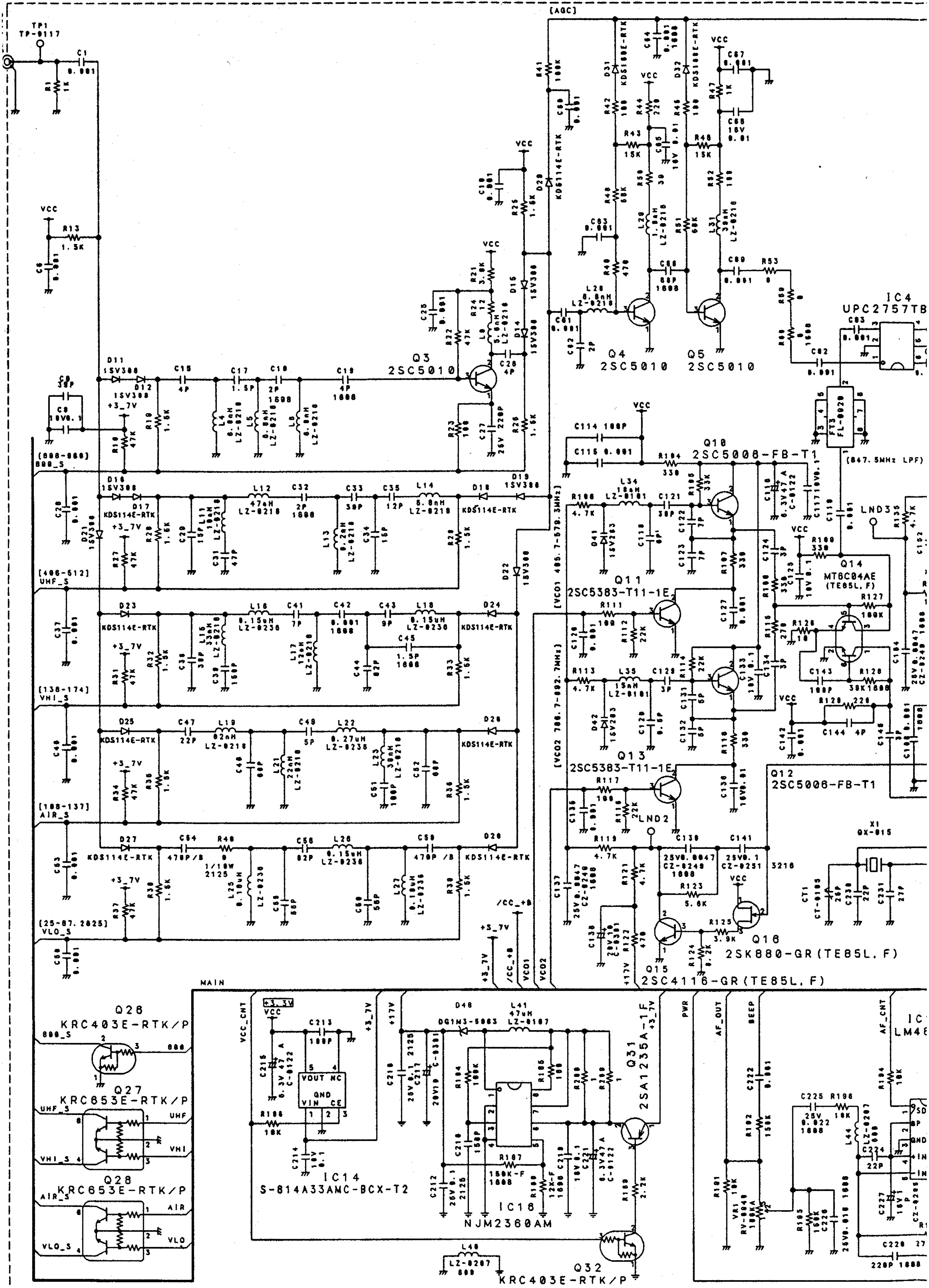
TP1
TP-0117
C1 0.001
R1 1K
VCC
R13 1.5K
C6 0.001
[AGC]
R41 100K
C60 0.001
D20 KDS114E-RTK
D31 KDS108E-RTK
C64 0.001 1608
D32 KDS108E-RTK
C67 0.001
R47 1K
C68 16V 0.01
R42 100
R44 220
R43 15K
C65 16V 0.01
R46 100
R48 15K
R49 68K
R50 39
R51 68K
R52 100
L29 1.0uH LZ-0210
L31 39nH LZ-0210
C63 0.001
R49 470
C66 68P 1608
C69 0.001
R53 0
R59 0
R60 1608
IC4
UPC2757TB
C83 0.001
C82 0.001
FT3 FL-0020
(847.5MHz LPF)
L28 6.8nH LZ-0210
C61 0.001
C62 2P
Q4 2SC5010
Q5 2SC5010
C18 0.001
R25 1.5K
D15 1SV308
D14 1SV308
R21 3.9K
R24 12
L9 5.6nH LZ-0210
C25 0.001
R22 47K
C26 4P
Q3 2SC5010
C27 25V 220P
R23 100
R26 1.5K
D11 1SV308
D12 1SV308
C9 39P
C8 10V0.1
+3_7V
R18 47K
R19 1.5K
C15 4P
C17 1.5P
C18 2P 1608
C19 4P 1608
L4 6.8nH LZ-0210
L5 6.8nH LZ-0210
L6 6.8nH LZ-0210
[800-960]
800_S
C20 0.001
D16 1SV308
D17 KDS114E-RTK
D21 1SV308
R27 47K
R28 1.5K
C29 15P
L11 33nH LZ-0210
C31 47P
L12 47nH LZ-0210
C32 2P 1608
C33 30P
C35 12P
L14 5.6nH LZ-0210
L13 8.2nH LZ-0210
C34 16P
D18 KDS114E-RTK
D19 1SV308
R29 1.5K
D22 1SV308
[406-512]
UHF_S
C37 0.001
D23 KDS114E-RTK
R31 47K
R32 1.5K
C38 30P
L15 33nH LZ-0210
C39 180P
L16 0.15uH LZ-0236
C41 7P
L17 12nH LZ-0210
C42 0.001 1608
C43 9P
L18 0.15uH LZ-0236
C45 1.5P 1608
C44 82P
D24 KDS114E-RTK
R33 1.5K
[136-174]
VHI_S
C46 0.001
D25 KDS114E-RTK
R34 47K
R35 1.5K
C47 22P
L19 LZ-0210
C48 68P
L21 22nH LZ-0210
C49 5P
L22 0.27uH LZ-0236
L23 39nH LZ-0210
C51 180P
C52 68P
D26 KDS114E-RTK
R36 1.5K
[108-137]
AIR_S
C53 0.001
D27 KDS114E-RTK
R37 47K
R38 1.5K
C54 470P /B
R40 0 1/10W 2125
L25 0.10uH LZ-0236
C55 68P
C56 82P
L26 0.15uH LZ-0236
C58 470P /B
L27 0.18uH LZ-0236
C59 56P
D28 KDS114E-RTK
R39 1.5K
[25-87.2025]
VLO_S
C50 0.001
+3_7V
/CC_+B
VCO1
VCO2
C114 100P
C115 0.001
VCC
R104 330
Q10
2SC5008-FB-T1
R105 33K
C116 6.3V47 A C-0122
C117 10V0.1
R106 4.7K
L34 18nH LZ-0101
C121 30P
C122 7P
C123 7P
D41 1SV283
C118 6P
R107 330
[VCO1 485.7-579.3MHz]
Q11
2SC5383-T11-1E
R111 100
R112 22K
C126 0.001
C127 0.001
C124 3P
C125 10V 0.1
R108 330
R109 330
Q14
MT6C04AE
(TE85L,F)
R127 100K
R126 10
R115 270
C143 100P
R128 39K 1608
R113 4.7K
L35 15nH LZ-0101
C129 3P
R114 22K
C131 5P
C132 5P
C130 6.5P
D42 1SV283
C133 10V 0.1
C134 3P
[VCO2 786.7-892.7MHz]
R116 330
Q13
2SC5383-T11-1E
R117 100
R118 22K
C135 0.001
C136 16V0.01
LND2
LND35
R135 4.7K
Q12
2SC5008-FB-T1
R129 220
C144 4P
C142 0.001
C145 3P
C146 1608
C147 0.001
C104 25V 0.0047 CZ-0240 1608
R119 4.7K
C138 25V0.0047 CZ-0240 1608
C141 25V0.1 CZ-0251 3216
C137 25V 0.0047 CZ-0240 1608
R121 4.7K
R123 5.6K
C139 16V0.1
R122 470
Q15
2SC4116-GR(TE85L,F)
R125 3.9K
R124 8.2K
Q16
2SK880-GR(TE85L,F)
+17V
X1
QX-015
CT1 CT-0105
C229 22P
C230 26P
C231 27P
MAIN
Q26
KRC403E-RTK/P
800_S
800
Q27
KRC653E-RTK/P
UHF_S
UHF
VHI_S
VHI
Q28
KRC653E-RTK/P
AIR_S
AIR
VLO_S
VLO
VCC_CNT
+3.3V
VCC
C213 100P
C215 6.3V 47 A C-0122
VOUT NC
GND
VIN CE
R188 18K
C214 10V 0.1
IC14
S-814A33AMC-BCX-T2
+3_7V
+17V
D40 DG1N3-5063
L41 47uH LZ-0107
C216 25V 0.1 2125
C217 20V10 C-0301
R184 100K
R186 100
R200
R208
C218 150P
C212 25V 0.1 2125
R187 150K-F 1608
R190 12K-F 1608
C219 10V 0.1
C221 6.3V47 A C-0122
IC16
NJM2360AM
Q31
2SA1235A-1F
+3_7V
R189 2.2K
Q32
KRC403E-RTK/P
L40 LZ-0207 800
PWR
AF_OUT
BEEP
C222 0.001
R192 150K
R191 10K
VR1 RV-0049 10KA
R195 150K
C226 25V0.010 1608
C225 25V 0.022 1608
R196 10K
AF_CNT
R194 10K
IC
LM48
L44 LZ-0207
C224 22P
C227 10V1 P CZ-0205
C228 220P 1608
SD
BP
GND
IN
IN

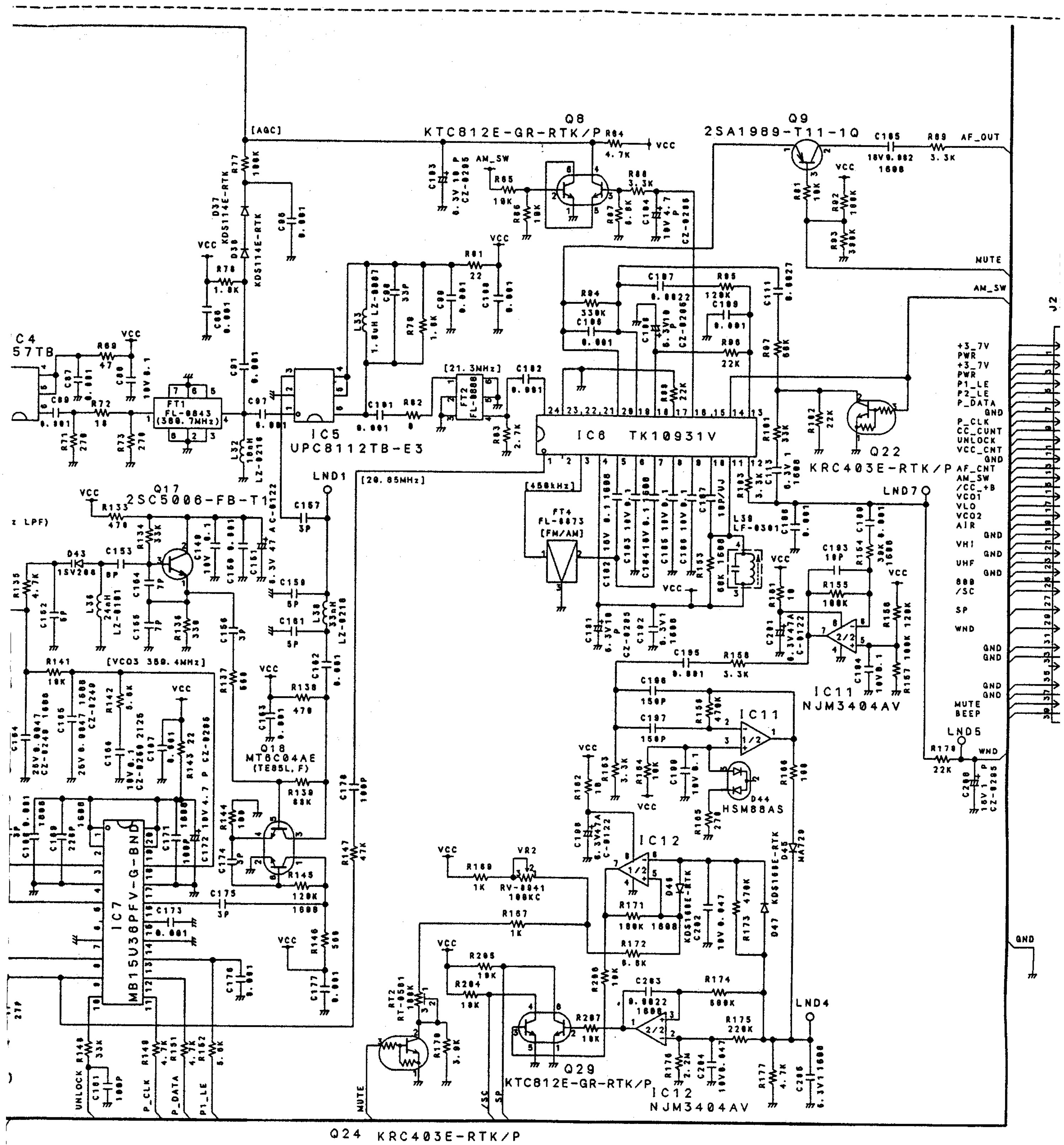
[AGC]
Q8
KTC812E-GR-RTK/P
Q9
2SA1989-T11-1Q
AF_OUT
AM_SW
MUTE
VCC
IC5
UPC8112TB-E3
IC6 TK10931V
FT1
FL-0843
(380.7MHz)
[20.85MHz]
[450kHz]
FT4
FL-0873
[FM/AM]
L39
LF-0301
Q22
KRC403E-RTK/P
LND1
LND7
LND5
LND4
Q17
2SC5006-FB-T1
[VCO3 380.4MHz]
Q18
MT6C04AE
(TE85L,F)
IC7
MB15U36PFV-G-BND
IC11
NJM3404AV
IC12
NJM3404AV
D44
HSM88AS
VR2
RV-0941
100KC
RT2
RT-0581
Q29
KTC812E-GR-RTK/P
Q24 KRC403E-RTK/P
UNLOCK
P_CLK
P_DATA
P1_LE
/SC
SP
J2
+3_7V
PWR
+3_7V
PWR
P1_LE
P2_LE
P_DATA
GND
P_CLK
CC_CUNT
UNLOCK
VCC_CNT
GND
AF_CNT
AM_SW
/CC_+B
VCO1
VLO
VCO2
AIR
GND
VHI
GND
UHF
GND
800
/SC
SP
WND
GND
GND
GND
GND
MUTE
BEEP
WND
GND

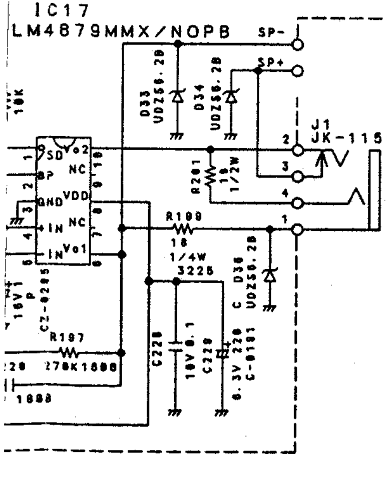
IC17
LM4879MMX/NOPB
SP-
SP+
J1
JK-1156
R201
R199
1/4W
3225
D33
D34
D36
C228
C229

NOTES:
1. RESISTANCE VALUES ARE SHOWN IN OHMS UNLESS OTHERWISE NOTED. (K=KILO OHM, M=MEG OHM)
2. RESISTOR WATTAGES ARE 1/16W [1005] UNLESS OTHERWISE NOTED.
3. CAPACITANCE VALUES ARE INDICATED IN MICRO FARADS UNLESS OTHERWISE NOTED. (P=MICRO-MICRO FARAD)
4. ALL CAPACITORS TEMPERATURE CHARACTERISTICS ARE [CH] (LESS THAN 1000PF) OR [B] (MORE THAN 1000PF) UNLESS OTHERWISE NOTED.
5. CHIP CAPACITORS TYPE ARE [1005] AND RATED 50V UNLESS OTHERWISE NOTED.
6. RESISTOR TOLERANCES ARE J UNLESS OTHERWISE NOTED.

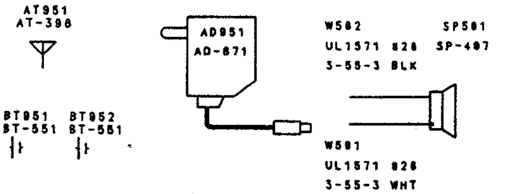
AT951
AT-398
AD951
AD-871
W502
UL1571 #28
3-55-3 BLK
SP501
SP-407
BT951
BT-551
BT952
BT-551
W501
UL1571 #28
3-55-3 WHT

DESIGN	DRAWN.BY	UNIDEN No. UB324C	MODEL No. AE92H
'04/11/08	'04/11/16		
KUROKI	KUROKI	TITLE MAIN ASS'Y SCHEMATIC DIAGRAM	
CHECK.BY	APPRO.BY		
		DRAWING No.	
REV.No		UNIDEN CORP.	